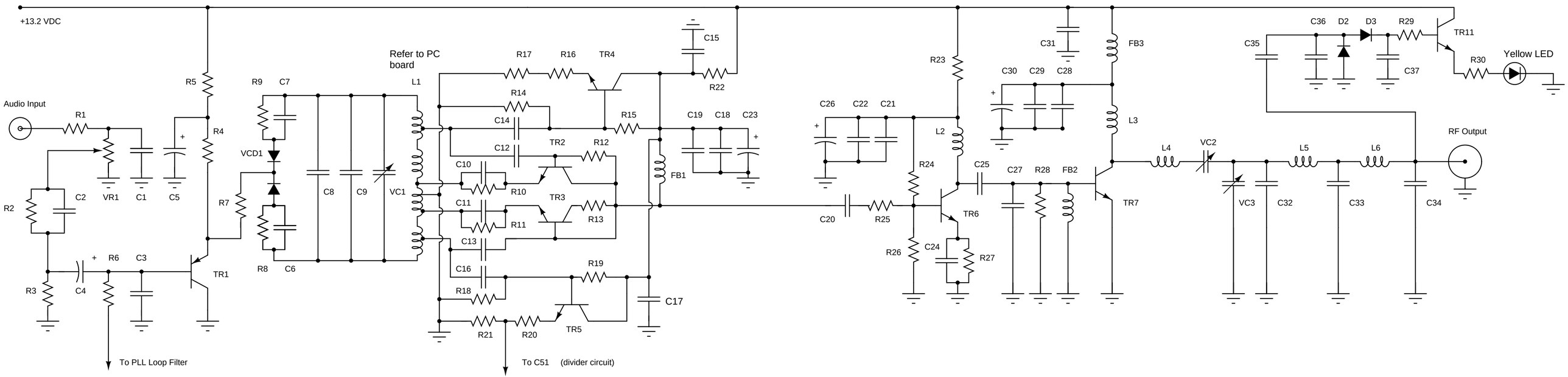Veronica 1 Watt PLL Schematic RF Section