Broadcast Warehouse 1 Watt PLL Transmitter Kit with LCD Display
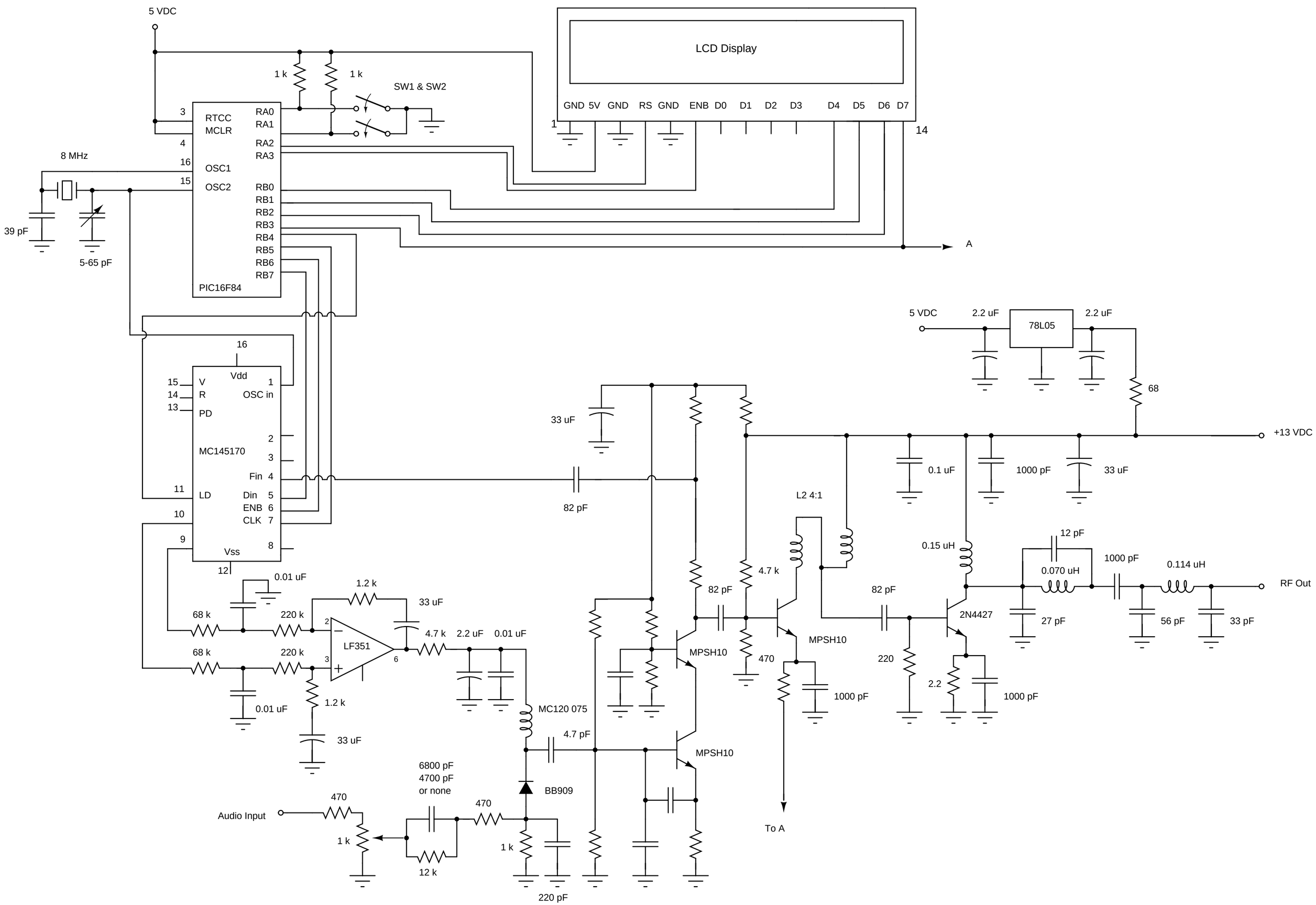
may have a few errors